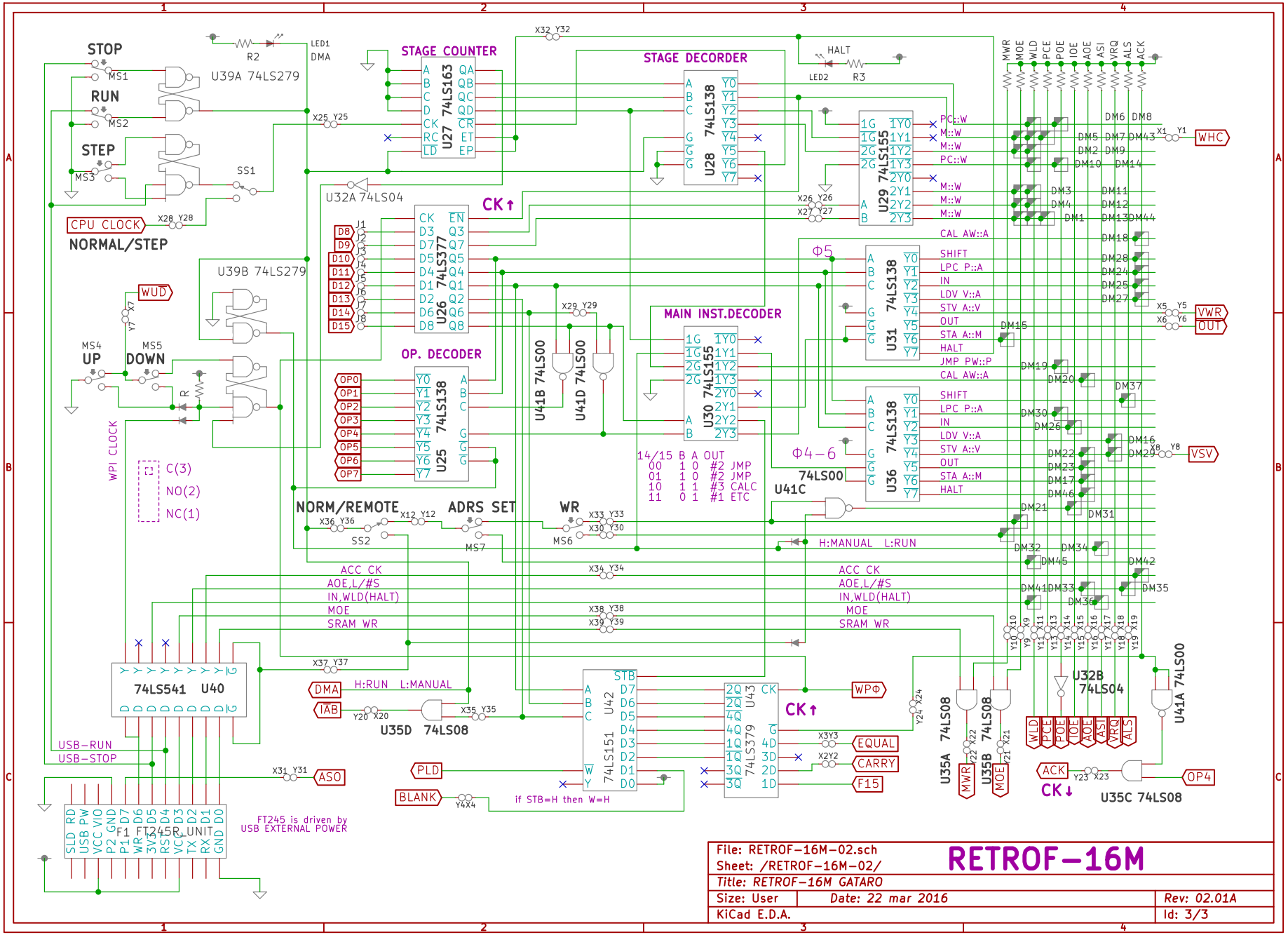

File: RETROF-16M-02.sch	**RETROF-16M**	
Sheet: /RETROF-16M-02/		
Title: RETROF-16M GATARO		
Size: User	Date: 22 mar 2016	Rev: 02.01A
KiCad E.D.A.		Id: 3/3